Configuration circuitry

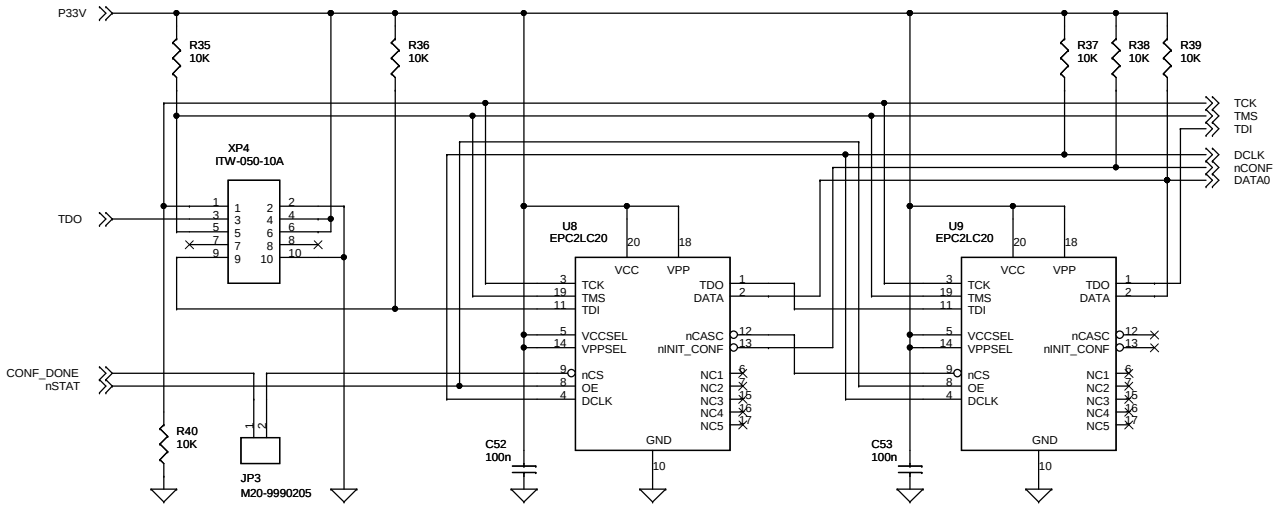

	I.Tsurin	
Title	FPGA configuration devices	
Size	Document Number Beam test telescope: Sequencer card	Rev 0
Date: Saturday, August 11, 2007	Sheet 5 of 8	