Configuration circuitry

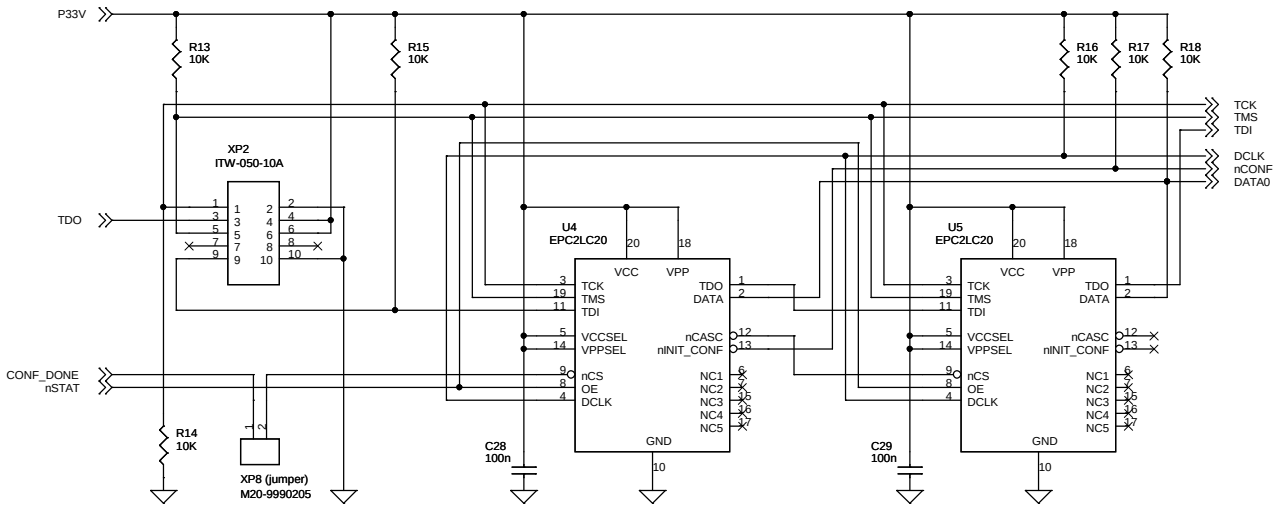

CAMAC dataway and power regulators

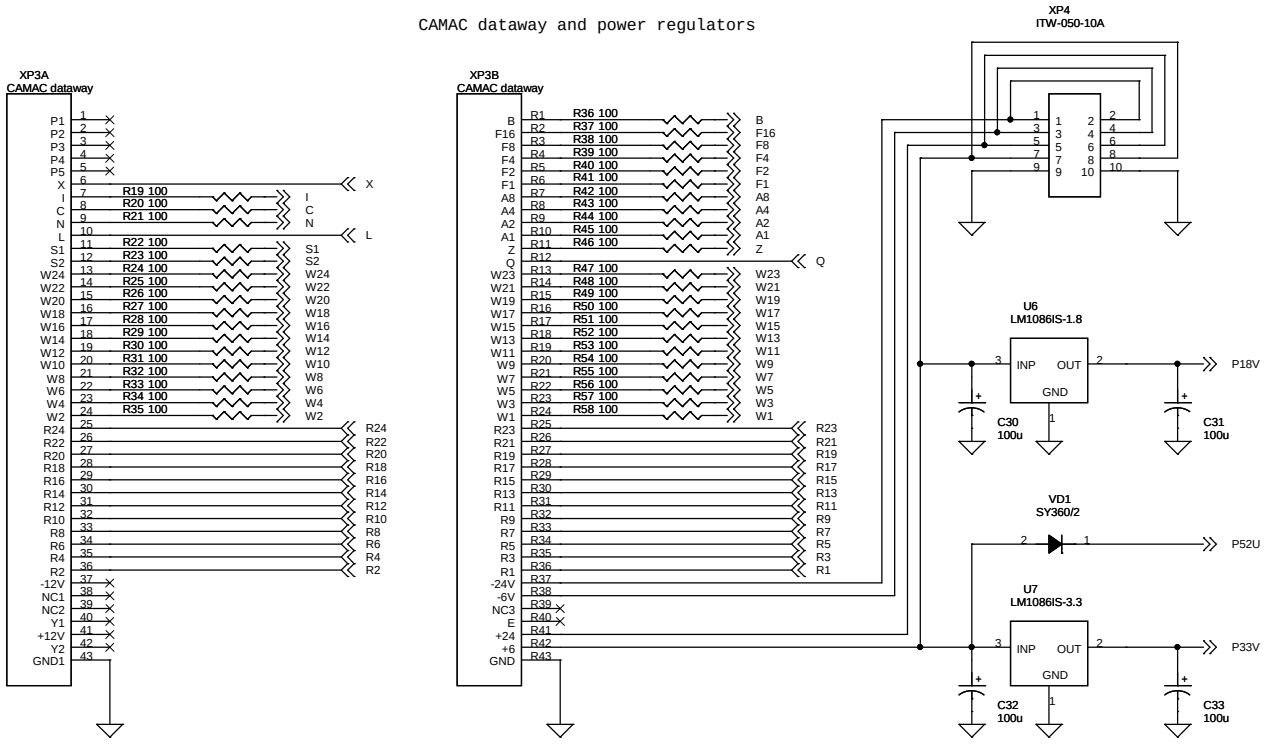

Inter-board connectors

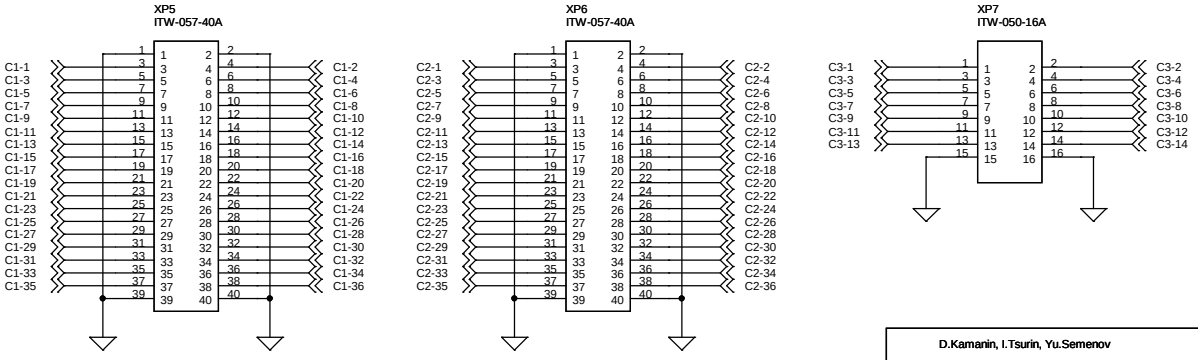

	D.Kamanin, I.Tsurin, Yu.Semenov	
Title	Board connector, power regulators and the FPGA's configuration scheme	
Size	Document Number Universal CAMAC module	Rev 0
Date: Friday, July 20, 2007	Sheet 2 of 2	