protec2

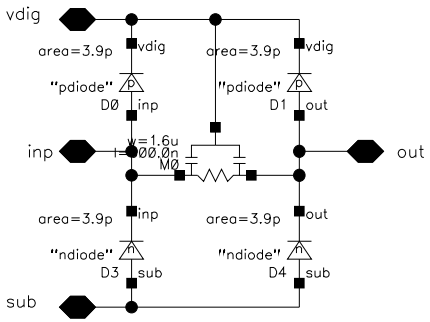
vdig
area=3.9p
vdig
"pdiode"
D0
inp
area=3.9p
vdig
"pdiode"
D1
out
inp
w=1.6u
l=100.0n
M0
out
area=3.9p
inp
"ndiode"
D3
sub
area=3.9p
out
"ndiode"
D4
sub
sub