rbores

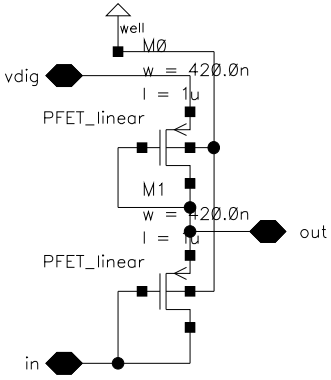
well
M0
w = 420.0n
l = 1u
vdig
PFET_linear
M1
w = 420.0n
l = 1u
out
PFET_linear
in