ifbres

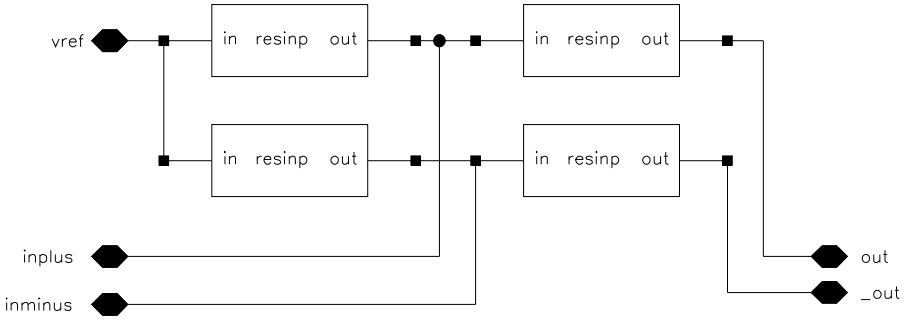
vref
in resinp out
in resinp out
in resinp out
in resinp out
inplus
inminus
out
_out