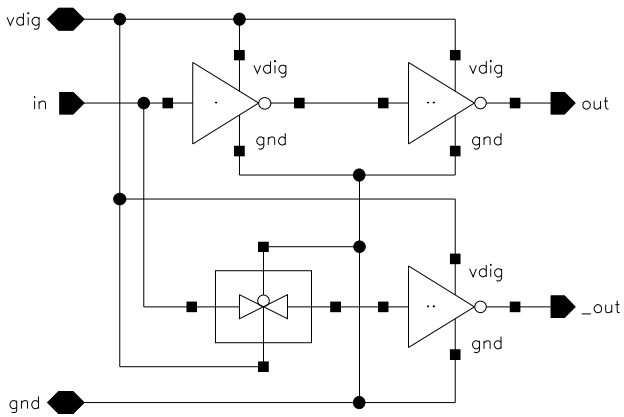split