calcel

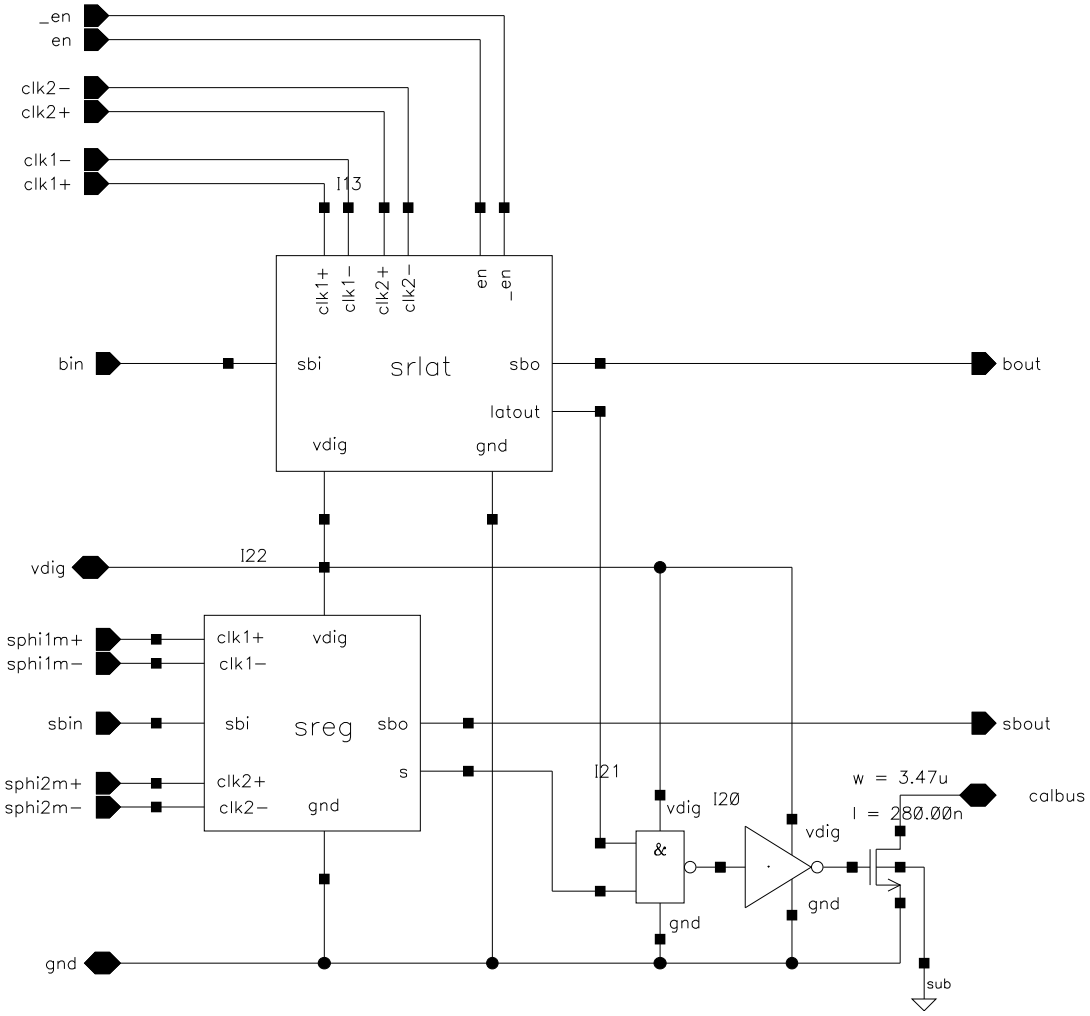
_en
en
clk2−
clk2+
clk1−
clk1+
I13
clk1+
clk1−
clk2+
clk2−
en
_en
bin
sbi
srlat
sbo
bout
latout
vdig
gnd
vdig
I22
sphi1m+
sphi1m−
clk1+
clk1−
vdig
sbin
sbi
sreg
sbo
sbout
s
sphi2m+
sphi2m−
clk2+
clk2−
gnd
I21
vdig
I20
&
vdig
gnd
gnd
w = 3.47u
l = 280.00n
calbus
gnd
sub