srdel

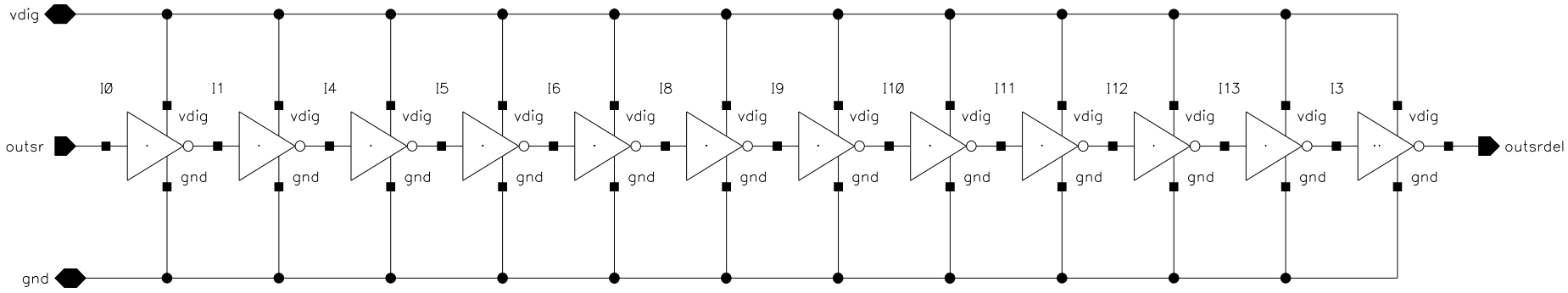
vdig
gnd
outsr
outsrdel
I0
I1
I4
I5
I6
I8
I9
I10
I11
I12
I13
I3
vdig
gnd