scell

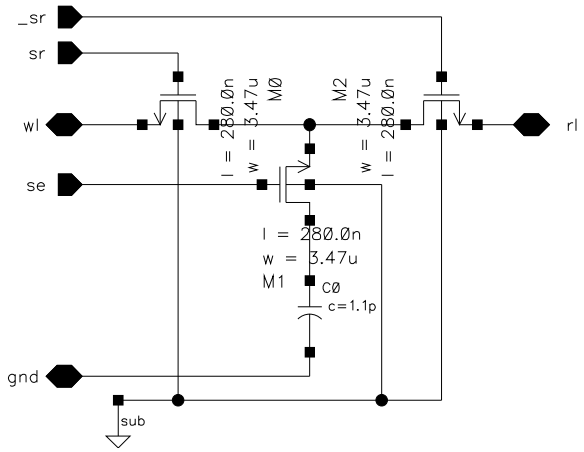
_sr
sr
wl
se
gnd
sub
rl
l = 280.0n
w = 3.47u
M0
M2
w = 3.47u
l = 280.0n
l = 280.0n
w = 3.47u
M1
C0
c=1.1p