# dcell

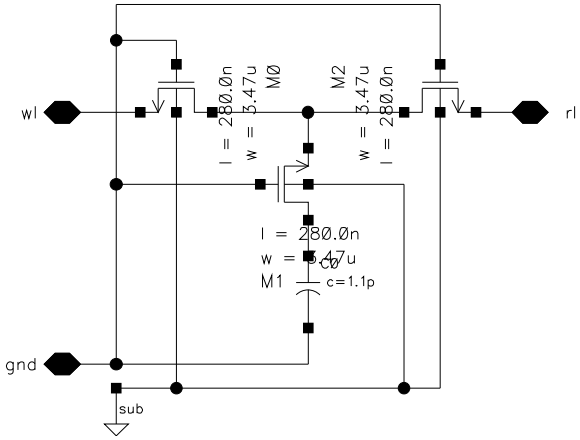
wl
gnd
sub
l = 280.0n
w = 5.47u
M0
l = 280.0n
w = 5.47u
M2
l = 280.0n
w = 5.47u
M1
c=1.1p
rl