nand

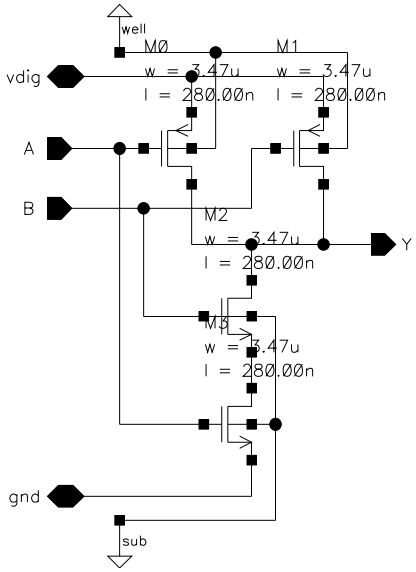
well
M0
w = 3.47u
l = 280.00n
M1
w = 3.47u
l = 280.00n
vdig
A
B
M2
w = 3.47u
l = 280.00n
Y
M3
w = 3.47u
l = 280.00n
gnd
sub