latch

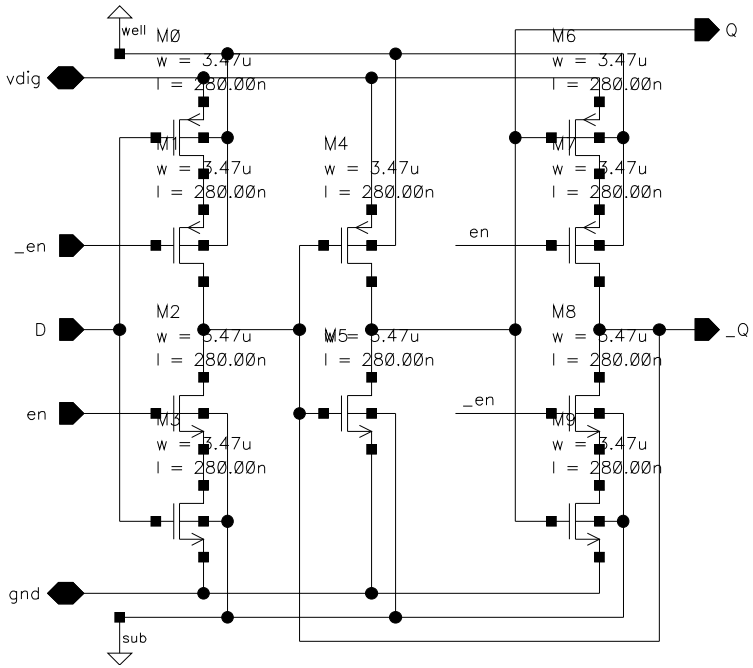
well
M0
w = 3.47u
l = 280.00n
vdig
M1
w = 3.47u
l = 280.00n
_en
M2
w = 3.47u
l = 280.00n
D
M3
w = 3.47u
l = 280.00n
en
gnd
sub
M4
w = 3.47u
l = 280.00n
M5
w = 3.47u
l = 280.00n
M6
w = 3.47u
l = 280.00n
Q
M7
w = 3.47u
l = 280.00n
en
M8
w = 3.47u
l = 280.00n
_Q
_en
M9
w = 3.47u
l = 280.00n