donkey

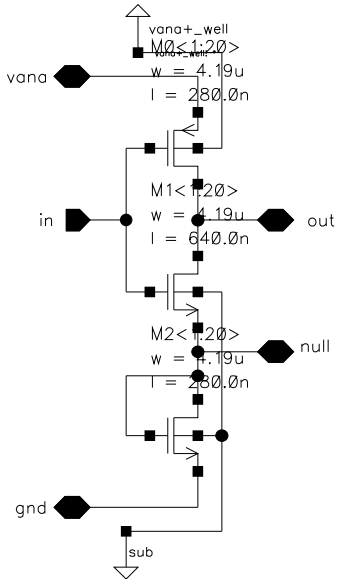
vana+_well
M0<1:20>
w = 4.19u
l = 280.0n
vana
M1<1:20>
w = 4.19u
l = 640.0n
in
out
M2<1:20>
w = 4.19u
l = 280.0n
null
gnd
sub