danaout

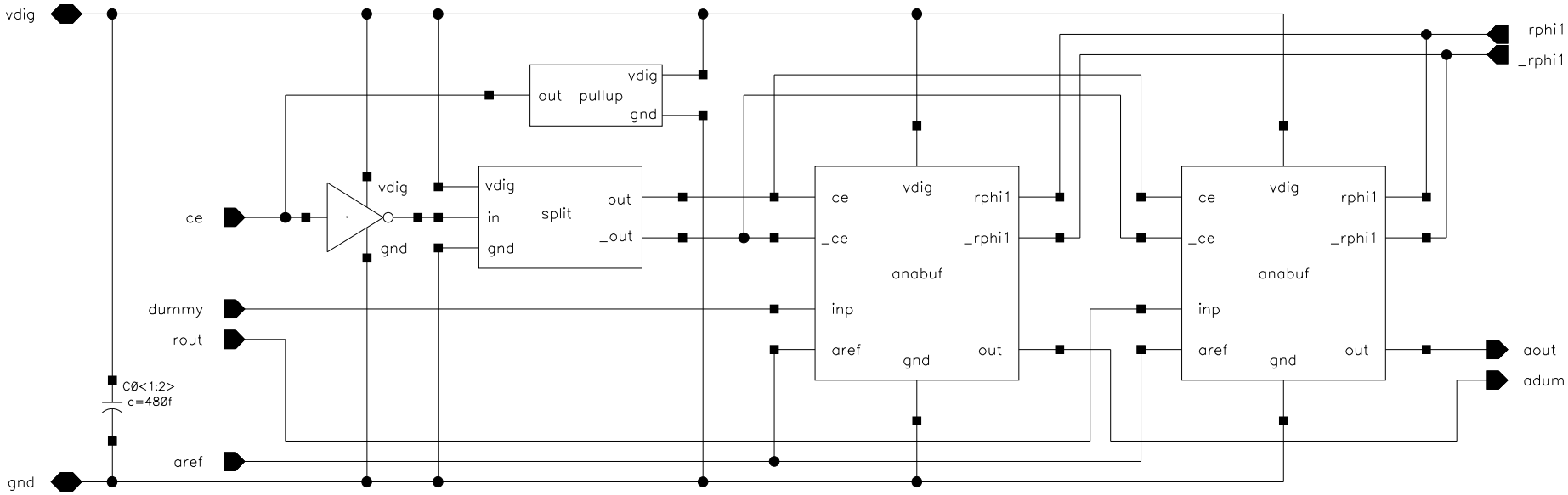
vdig
gnd
ce
dummy
rout
aref
C0<1:2>
c=480f
vdig
gnd
out
pullup
vdig
gnd
vdig
in
gnd
split
out
_out
ce
_ce
inp
aref
vdig
anabuf
gnd
rphi1
_rphi1
out
ce
_ce
inp
aref
vdig
anabuf
gnd
rphi1
_rphi1
out
rphi1
_rphi1
aout
adum