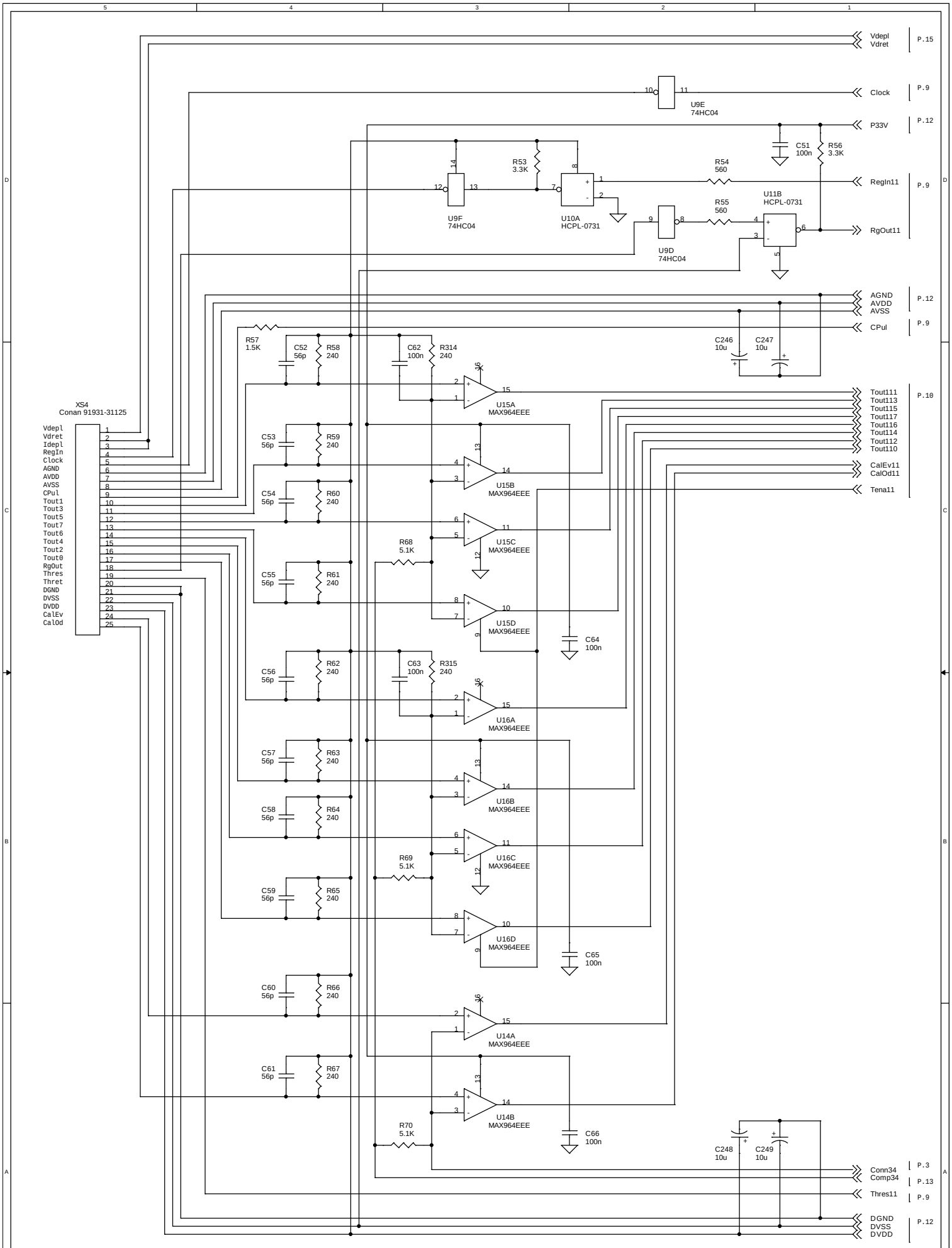

H.Henschel, I.Tsurin		
Title: Hybrid 11 - to - motherboard connection		
Size	Document Number: BST Pad trigger system: Frontend board	Rev 2
Date: Friday, September 23, 2005	Sheet 4 of 15	