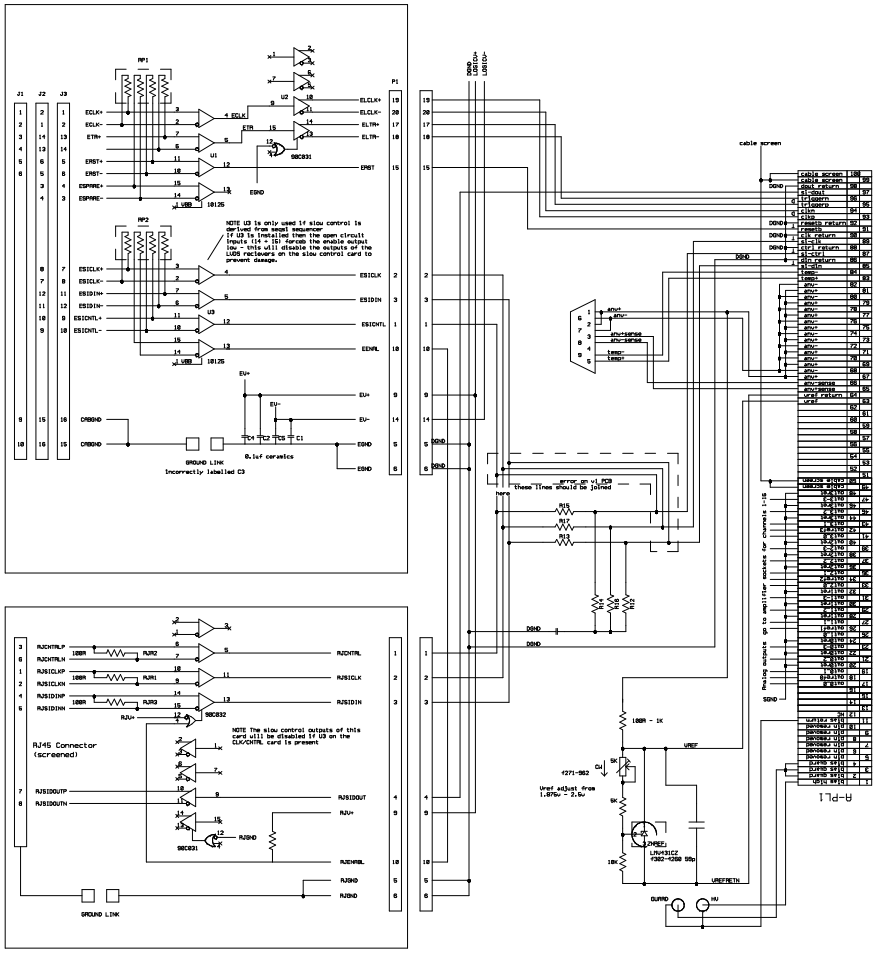

J1
J2
J3
P1
RP1
RP2
U1
U2
U3
ECLK+
ECLK-
ETR+
ERST+
ERST-
ESPARE+
ESPARE-
ESICLK+
ESICLK-
ESIDIN+
ESIDIN-
ESICNTL+
ESICNTL-
CRBGND
ELCLK+
ELCLK-
ELTR+
ELTR-
ERST
EENAL
EV+
EV-
EGND
DGND
LOGIC0+
LOGIC0-
NOTE U3 is only used if slow control is derived from seqel sequencer
If U3 is installed then the open circuit inputs (14 - 15) forcem the enable output low - this will disable the outputs of the LVDS recievers on the slow control card to prevent damage.
0.1uf ceramics
GROUND LINK
Incorrectly labelled C3
RJ45 Connector
(screened)
RJCHTRLP
RJCHTRLN
RJSICLKP
RJSICLKN
RJSIDINP
RJSIDINN
RJSIDOUTP
RJSIDOUTN
RJCHTRL
RJSICLK
RJSIDIN
RJSIDOUT
RJU+
RJGND
RJENABL
NOTE The slow control outputs of this card will be disabled if U3 on the CLK/CNTRL card is present
cable screen
error on v1 PCB
these lines should be joined
here
Analog outputs go to amplifier sockets for channels 1-16
A-PL1
100R - 1K
VREF
f271-962
Vref adjust from
1.875v - 2.5v
LRH31CZ
f302-4260 55p
VREFRETN
GUARD
HV