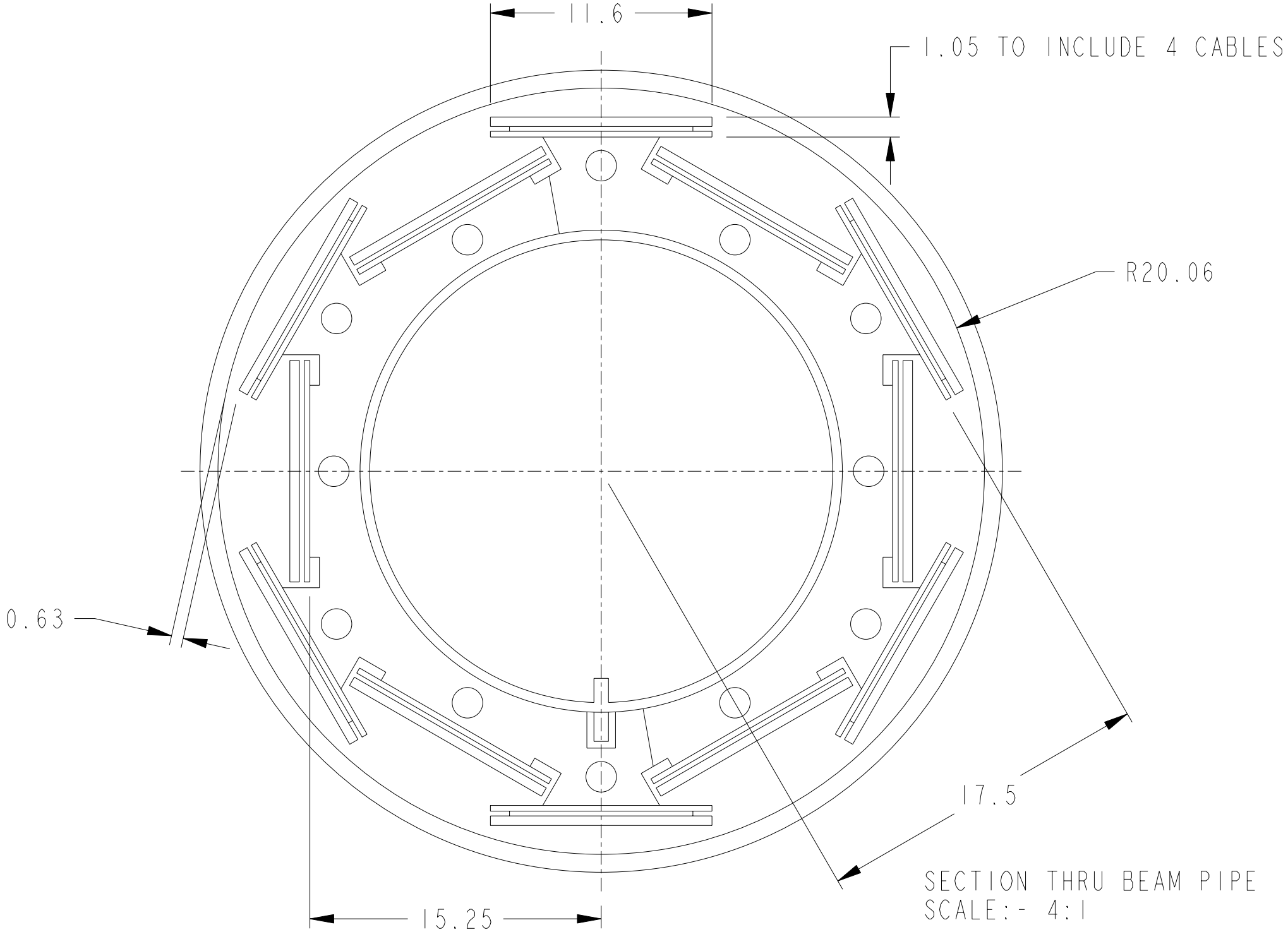

NAME:AAM OBJECT:SECTION-1 DATE:26-Jan-99 13:43:34