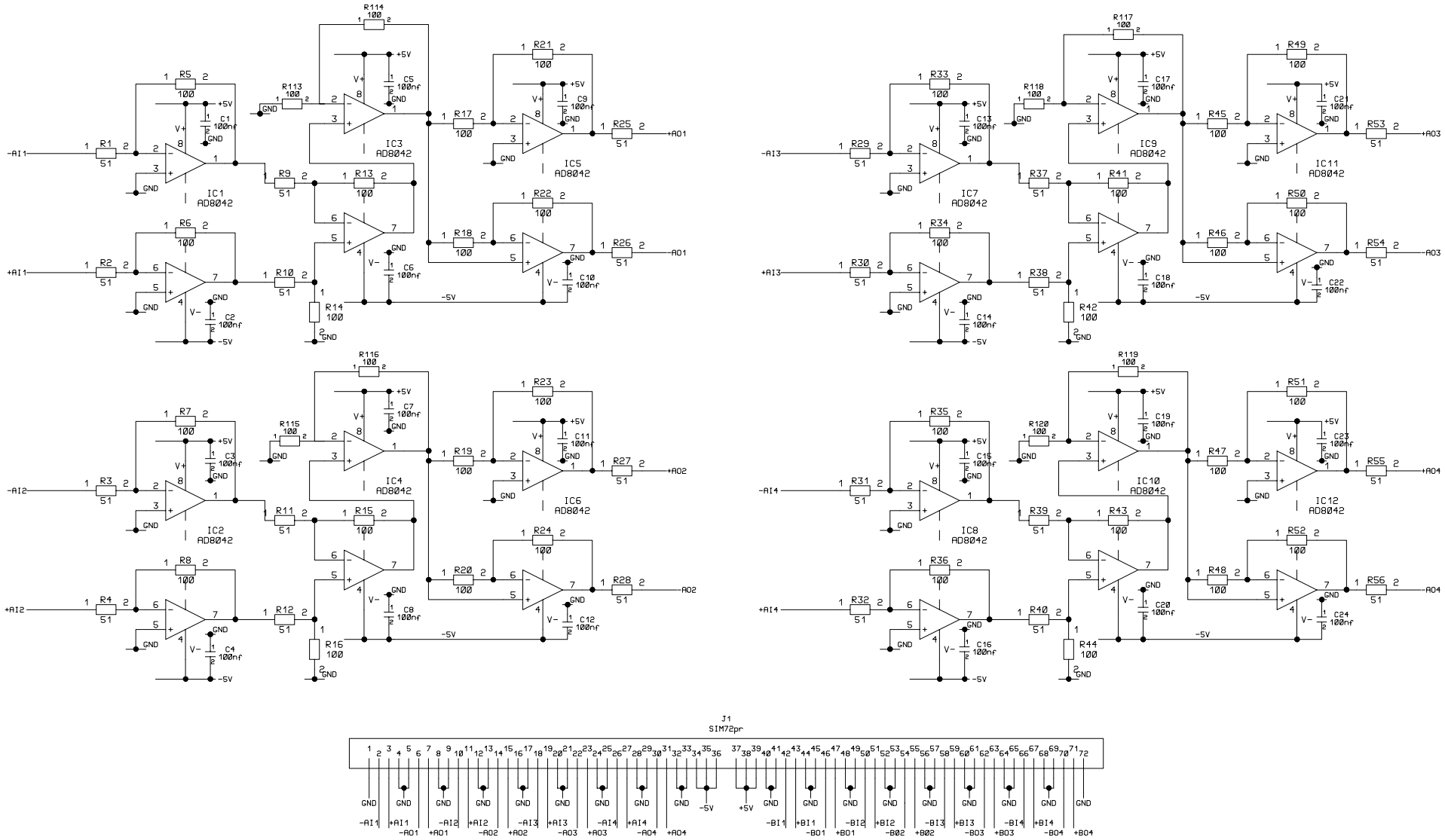

TITLE	DRIVER BOARD	SHEET 1 OF 2 SHEETS	
		STATUS : IN WORK	
DRAWING NO. DRB-001	LHCb - VELO	APPROVED	
FILE: RPT_DRIVER_BOARD.RXL		APPROVED	JRF
		CHECKED	JRF
UNIL-IPHE	RPT BOARD	DRAWN BY	R. FREI
		DATE	JULY 03

A3